Pi Side Tables

DESIGNED IN 2010

ASSEMBLY NOTES | REV 00

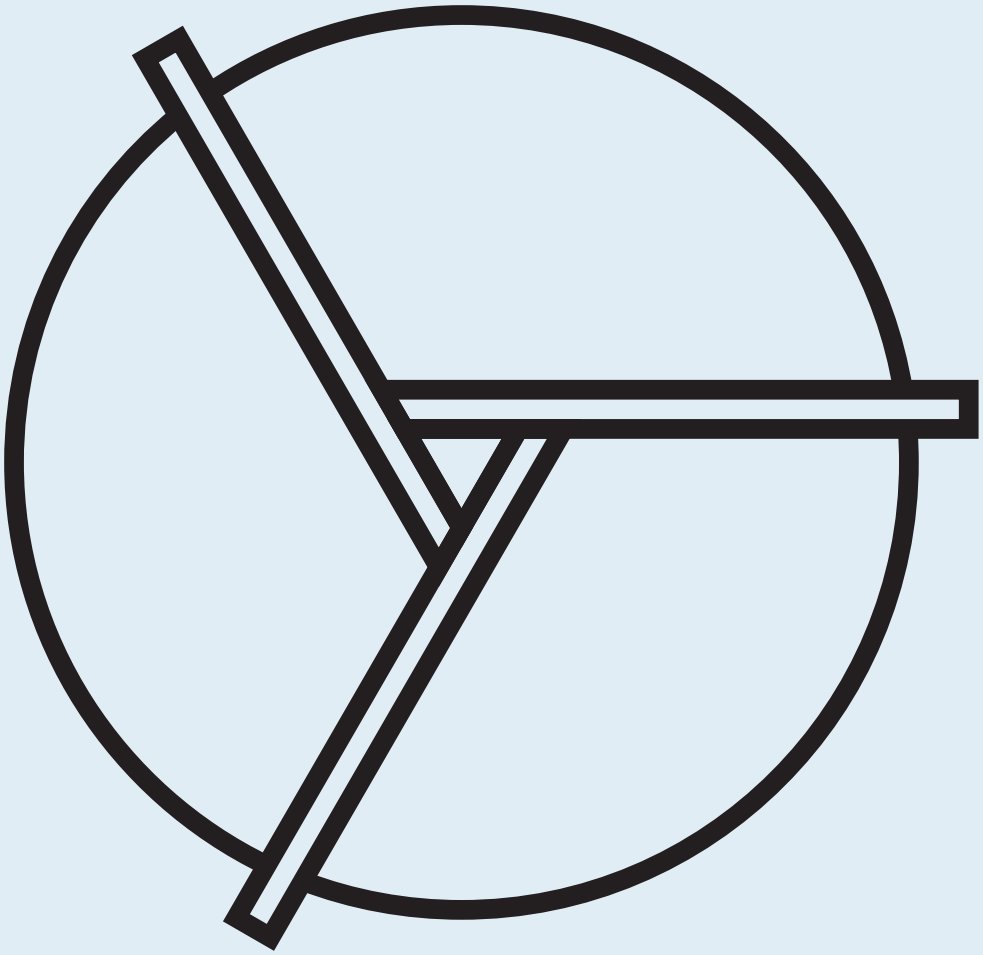

HOT SLICES.

Slices of powder-coated steel team with solid walnut legs to achieve eye-catching results.

NEED A HAND?

Contact us at **service@bludot.com** or **844.425.8368** for assistance.

Parts & Hardware

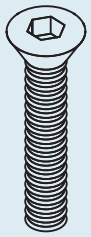

QTY 6

Pt. 1043

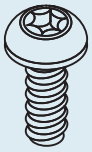

QTY 9

Pt. 1042b

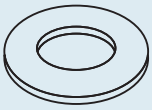

QTY 9

Pt. 3002

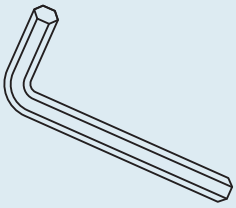

QTY 1

Pt. 9003

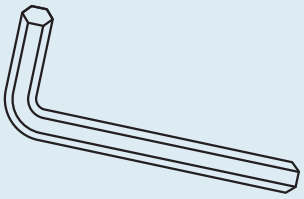

QTY 1

Pt. 9004

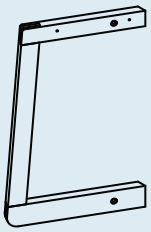

QTY 3

Leg

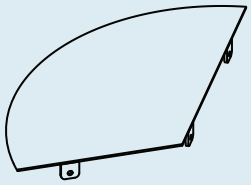

QTY 3

Top Panel

Step 01

ASSEMBLE THE BASE

Place pieces on carpet or a soft surface. Assemble the base by combining each leg as shown.

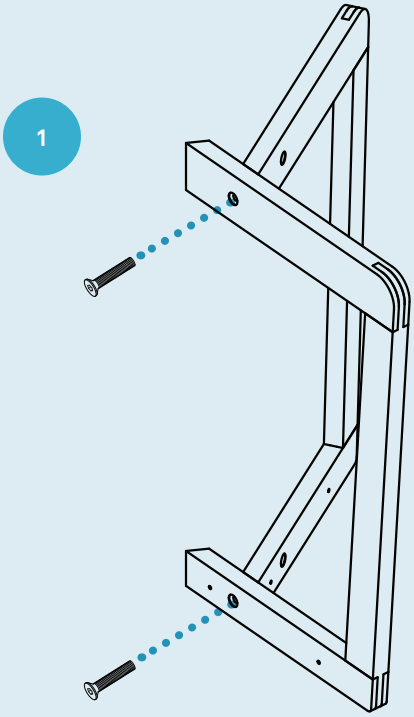

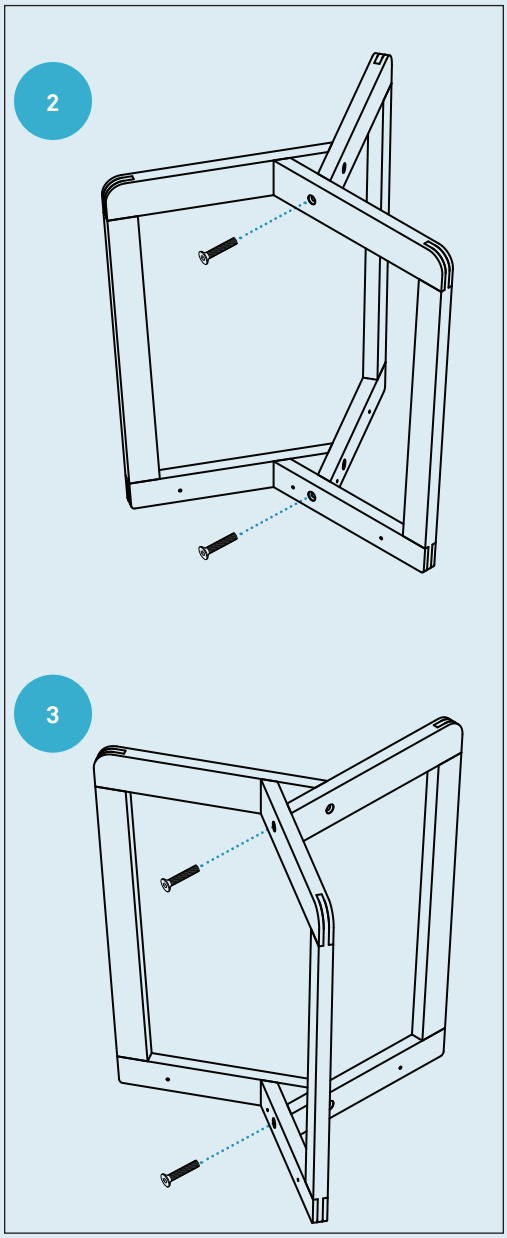

PT. 1043 X 6

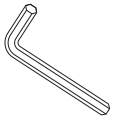

PT. 9004 X 1

Step 02

INSTALL THE TOP PANELS

Slide the bolt through the top panel. Then use the bolt to locate the threaded insert. Repeat for all three panels, then flip the table right side up.

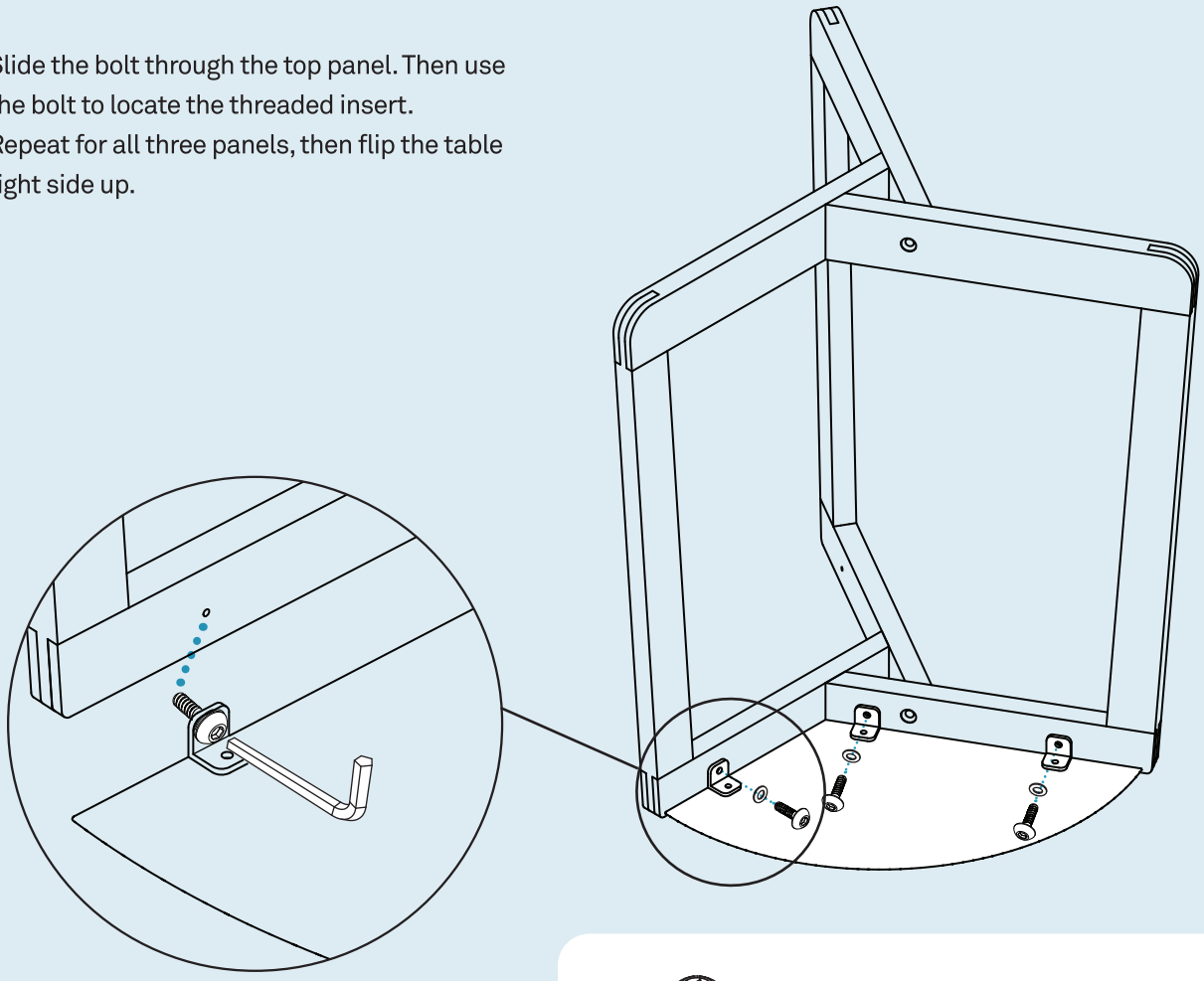

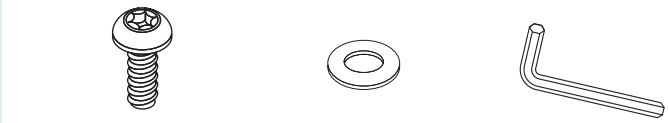

PT. 1042b X 9 **PT. 3002 X 9** **PT. 9003 X 1**

Additional Information

CLEAN

Clean powder-coated top with a soft cloth or sponge using a mild detergent, such as dish soap, and warm water. Wipe completely dry with a soft cloth.

Clean wood base with a slightly damp, soft cloth. To remove dirt and finger-prints, use a quality cleaner formulated for wood furniture. Wipe completely dry with a soft cloth in the direction of the wood grain.